EANCOM® 2002 S3

PARTIN

Party information message

Edition 2016 Upd. 2021

2. Message Structure Chart 3
3. Branching Diagram..... 5
4. Segments Description 11
5. Segments Layout..... 15
6. Example(s) 71

1. Introduction

Status

MESSAGE TYPE	: PARTIN
REFERENCE DIRECTORY	: D.01B
EANCOM® SUBSET VERSION	: 009

Definition

A message to enable the transmission of basic information regarding locations and the related operational, administrative, commercial and financial data.

Principles

The identification of the trading partners is an essential issue for the Electronic Data Interchange. It is even more important to identify the locations precisely and unambiguously with EDI than with traditional paper documents.

The Party Information message serves to maintain the trading partner's master data files.

The Party Information message can also be used by the trading partners to feed a central catalogue of addresses, making the information available to all interested parties.

By using location numbers and describing them in the Party Information Message, the trading partners can use these numbers to refer to the appropriate locations in later exchanges of trading documents.

The Party Information Message is used to specify information related to physical locations and to functional locations. A functional location is usually a specific department within a company.

It is recommended that one separate message be provided per message function (DE 1225 in BGM segment).

2. Message Structure Chart

EANCOM® 2002 S3 Edition 2016 Upd. 2021 Part II
PARTIN Party information message

UNA		1	C	1	- Service string advice
UNB		2	M	1	- Interchange header

Party Information Heading Section

UNH		3	M	1	- Message header
BGM		4	M	1	- Beginning of message
DTM		5	M	5	- Date/time/period
FII		6	C	10	- Financial institution information
FTX		7	C	5	- Free text
SG1	+		C	5	- RFF-DTM
RFF	+	8	M	1	- Reference
DTM	+	9	C	1	- Date/time/period
SG2			C	2	- NAD-SG3
NAD		10	M	1	- Name and address
SG3			C	5	- CTA-COM
CTA		11	M	1	- Contact information
COM		12	C	5	- Communication contact
UNS		13	M	1	- Section control

Party Information Detail Section

SG4			C	200000	- NAD-DTM-FII-IDE-FTX-TAX-HYN-SG5-SG6-SG7-SG8-SG9-SG10-S
NAD		14	M	1	- Name and address
DTM		15	C	5	- Date/time/period
FII		16	C	10	- Financial institution information
IDE	+	17	C	9	- Identity
FTX	+	18	C	9	- Free text
TAX	+	19	C	9	- Duty/tax/fee details
HYN	+	20	C	9	- Hierarchy information
SG5			C	99	- LOC
LOC	+	21	M	1	- Place/location identification
SG6			C	15	- RFF-DTM
RFF		22	M	1	- Reference
DTM		23	C	1	- Date/time/period
SG7			C	5	- CTA-COM
CTA		24	M	1	- Contact information
COM		25	C	5	- Communication contact
SG8			C	10	- SCC-DTM
SCC		26	M	1	- Scheduling conditions
DTM		27	C	2	- Date/time/period
SG9	+		C	1	- TOD-LOC
TOD	+	28	M	1	- Terms of delivery or transport
LOC	+	29	C	1	- Place/location identification
SG10	+		C	999	- PAI-PAT-CUX-DTM-PCD-MOA
PAI	+	30	M	1	- Payment instructions
PAT	+	31	C	1	- Payment terms basis
CUX	+	32	C	2	- Currencies
DTM	+	33	C	9	- Date/time/period
PCD	+	34	C	9	- Percentage details
MOA	+	35	C	9	- Monetary amount
SG12	+		C	999	- CCI-MOA-QTY-CAV-DTM-MEA
CCI	+	36	M	1	- Characteristic/class id
MOA	+	37	C	9	- Monetary amount
QTY	+	38	C	9	- Quantity
CAV	+	39	C	9	- Characteristic value
DTM	+	40	C	9	- Date/time/period

2. Message Structure Chart

EANCOM® 2002 S3 **Edition 2016 Upd. 2021** **Part II**
PARTIN Party information message

MEA	+	41	C	9	- Measurements
SG13	+		C	999	- PRC-DTM-SG14
PRC	+	42	M	1	- Process identification
DTM	+	43	C	9	- Date/time/period
SG14	+		C	999	- LIN-NAD-SG15
LIN	+	44	M	1	- Line item
NAD	+	45	M	1	- Name and address
SG15	+		M	99	- DOC
DOC	+	46	M	1	- Document/message details

Party Information Summary Section

UNT	47	M	1	- Message trailer
UNZ	48	M	1	- Interchange trailer

3. Branching Diagram

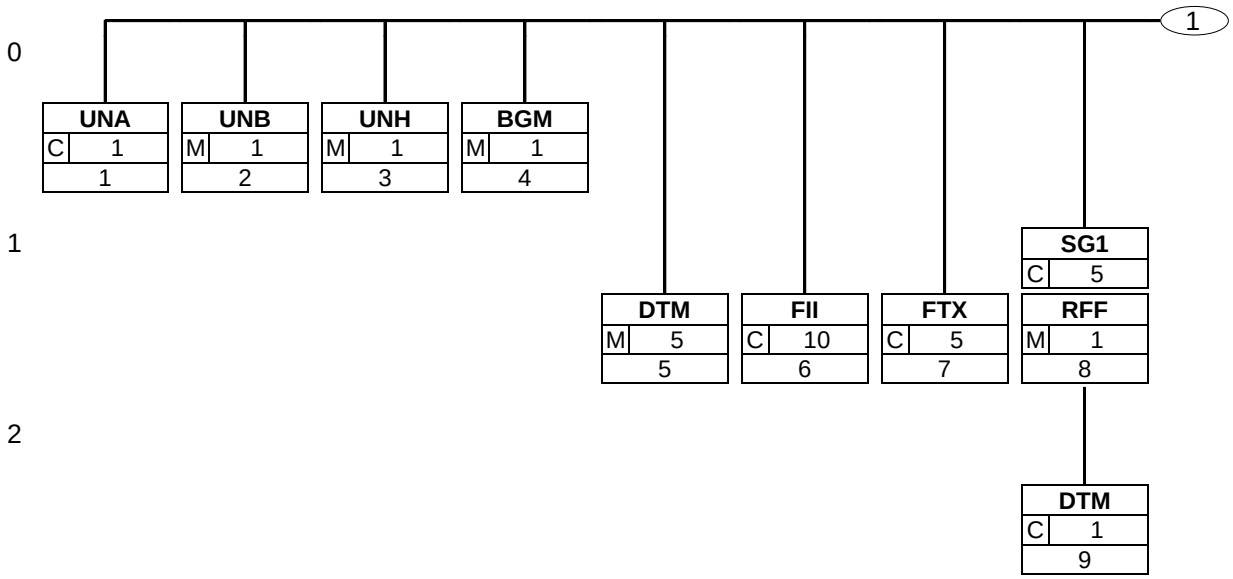

3. Branching Diagram

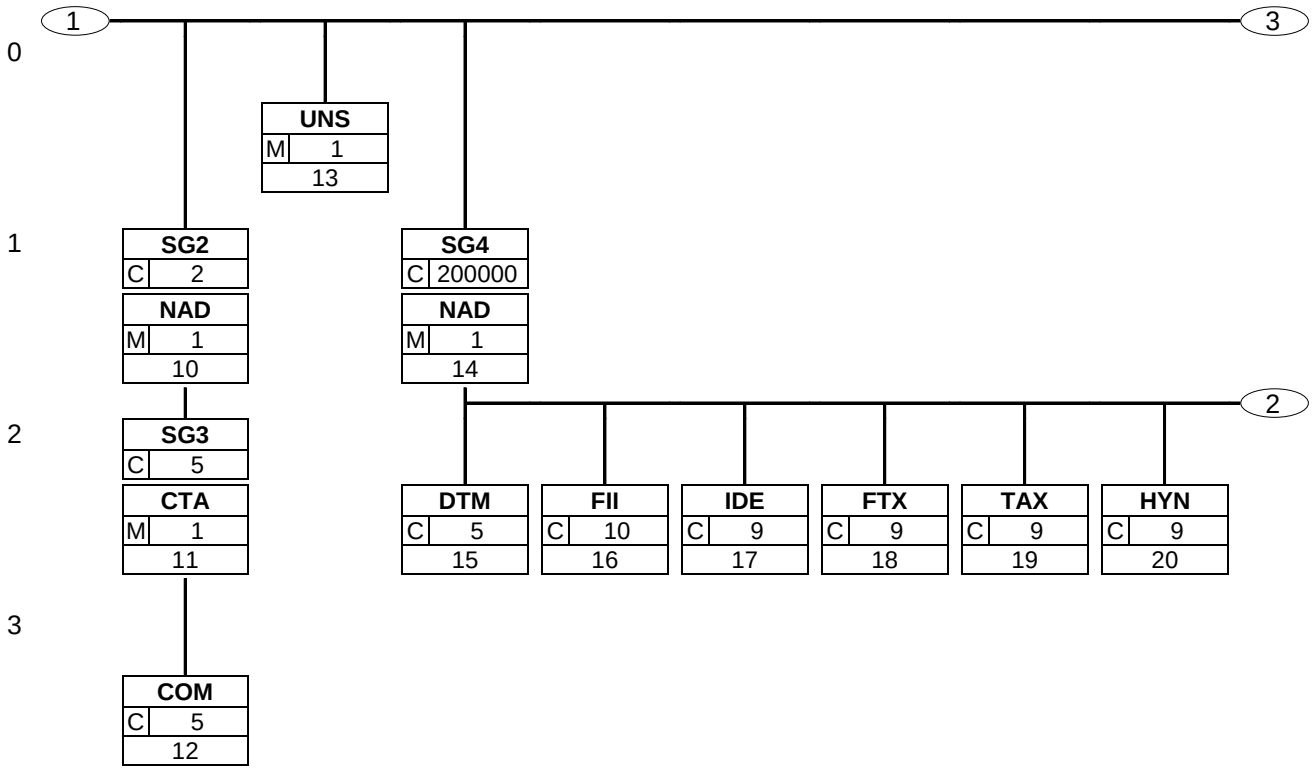

3. Branching Diagram

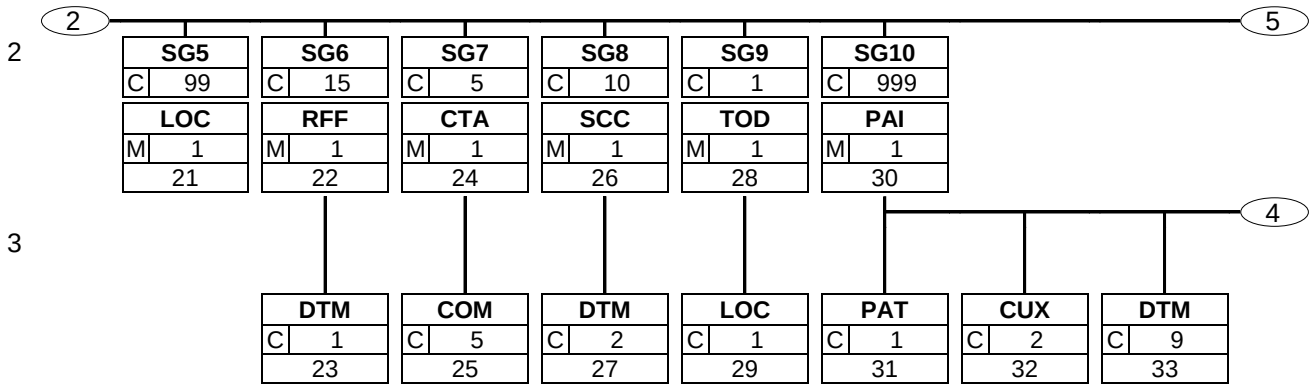

3. Branching Diagram

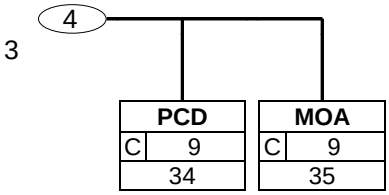

3. Branching Diagram

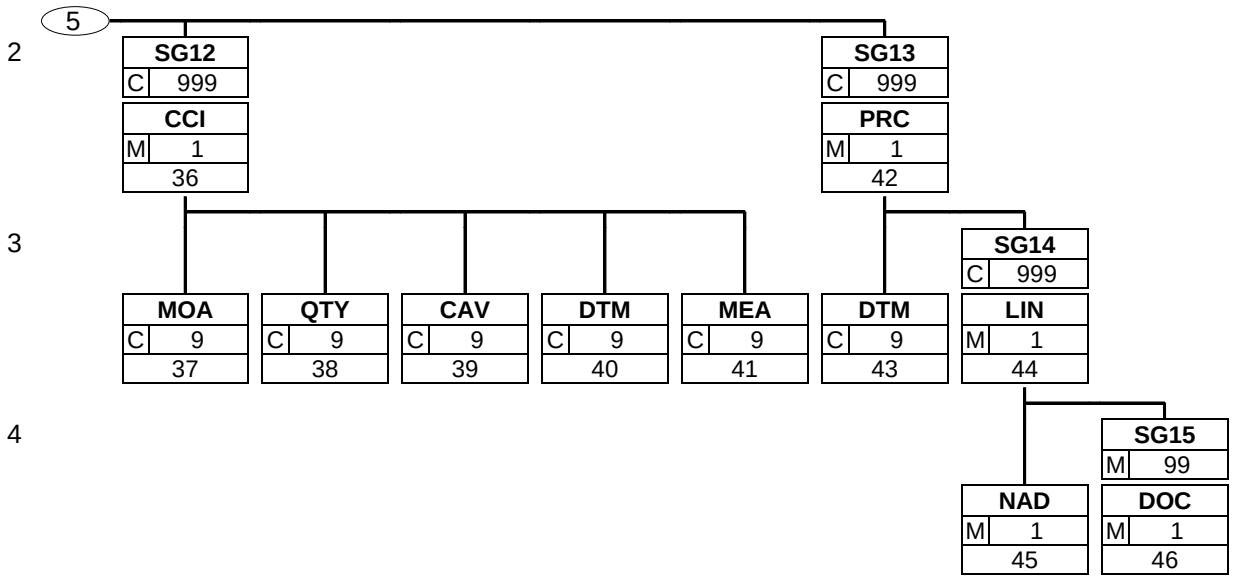

3. Branching Diagram

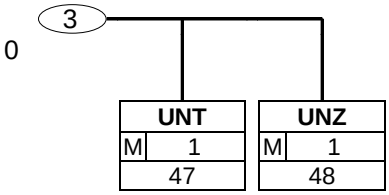

4. Segments Description

UNA - C 1 - Service string advice

The service string advice shall begin with the upper case characters UNA immediately followed by six characters in the order shown below. The same character shall not be used in more than one position of the UNA.

UNB - M 1 - Interchange header

This segment is used to envelope the interchange, as well as to identify both, the party to whom the interchange is sent and the party who has sent the interchange. The principle of the UNB segment is the same as a physical envelope which covers one or more letters or documents, and which details, both the address where delivery is to take place and the address from where the envelope has come.

Party Information Heading Section

UNH - M 1 - Message header

This segment is used to head, identify and specify a message.

BGM - M 1 - Beginning of message

This segment is used to indicate the type and function of a message and to transmit the identifying number.

DTM - M 5 - Date/time/period

This segment is used to specify the date or period of the Party Information message.

FII - C 10 - Financial institution information

This segment is used to identify the financial institution and account details of the Party Information sender.

FTX - C 5 - Free text

This segment is used to provide free or coded text information related to the complete party information message.

SG1 - C 5 - **RFF-DTM**

A group of segments indicating reference numbers relating to the whole message.

RFF - M 1 - Reference

This segment is used to give references.

DTM - C 1 - Date/time/period

This segment is used to indicate dates related to the references specified in the preceding RFF segment.

SG2 - C 2 - **NAD-SG3**

A group of segments identifying Names, Addresses, Contacts and Communication numbers relevant to the sender and the receiver of the message.

NAD - M 1 - Name and address

This segment is used to identify the trading partners exchanging Party Information data. Identification of the sender and receiver is mandatory in the Party Information message.

SG3 - C 5 - **CTA-COM**

A group of segments giving details of the specific person or department within the party.

CTA - M 1 - Contact information

This segment is used to identify a department and person within the party specified in the previous NAD segment.

COM - C 5 - Communication contact

This segment is used to identify the communications number and the type of communications used for the person or department identified in the CTA segment.

4. Segments Description

UNS - M 1 - Section control

This segment marks the end of the header information and the beginning of the details information.

Party Information Detail Section

SG4 - C 200000 - **NAD-DTM-FII-IDE-FTX-TAX-HYN-SG5-SG6-SG7-SG8-SG9-SG10-SG12-SG13**

A group of segments for giving the details of a party.

NAD - M 1 - Name and address

This segment is used to specify the party being identified. Identification of at least one party is mandatory in this segment as the NAD segment at detail level is the trigger segment to the detail information.

DTM - C 5 - Date/time/period

This segment is used to specify any dates or times associated with the party identified in the previous NAD segment.

FII - C 10 - Financial institution information

This segment is used to identify the financial institution and account details of the Party identified in the preceding NAD segment.

IDE - C 9 - Identity

This segment is used to provide additional/alternative identification of the function(s) within the party specified in the previous NAD segment.

FTX - C 9 - Free text

This segment is used to provide free or coded text information related to the current party.

TAX - C 9 - Duty/tax/fee details

This TAX segment is used to indicate the usual tax situation for the enterprise identified in the previous NAD segment.

HYN - C 9 - Hierarchy information

This segment is used to provide hierarchical connections from the current party to a higher or lower level party.

SG5 - C 99 - **LOC**

A group of segments for giving locations and dates relevant to party.

LOC - M 1 - Place/location identification

This segment is used to identify the location via geographical coordinates when no addresses or GLN already exists (road under construction, building sector, etc…).

SG6 - C 15 - **RFF-DTM**

A group of segments for giving references relevant to the party.

RFF - M 1 - Reference

This segment is used to specify any references which are particular to the party identified in the preceding NAD segment, e.g., VAT registration number.

DTM - C 1 - Date/time/period

This segment is used to indicate dates related to the references specified in the preceding RFF segment.

SG7 - C 5 - **CTA-COM**

A group of segments giving contact details of the specific person or department within the party.

CTA - M 1 - Contact information

This segment is used to identify a contact department and/or person within the party specified in the previous NAD segment.

4. Segments Description

COM - C 5	- Communication contact	
	This segment is used to identify the communications number and the type of communications used for the person or department identified in the CTA segment.	
SG8 - C 10	- **SCC-DTM**	
	A group of segment specifying schedules related to the party identified in the NAD segment.	
SCC - M 1	- Scheduling conditions	
	This segment is used to indicate any delivery schedules for the current party.	
DTM - C 2	- Date/time/period	
	This segment is used to indicate date/time information relevant to the delivery schedule provided in the SCC segment.	
SG9 - C 1	- **TOD-LOC**	
	A group of segments indicating the terms of delivery for the whole invoice.	
TOD - M 1	- Terms of delivery or transport	
	This segment is used to specify the terms of delivery for the specified location in the previous NAD segment.	
LOC - C 1	- Place/location identification	
	This segment is used to identify the location where the terms of delivery apply.	
SG10 - C 999	- **PAI-PAT-CUX-DTM-PCD-MOA**	
	A group of segments relating to the standard payment instructions, payment terms, the reference and the payment currencies.	
PAI - M 1	- Payment instructions	
	A segment giving information on usual payment instructions.	
PAT - C 1	- Payment terms basis	
	This segment specifies the usual payment terms for the enterprise identified in the previous NAD segment.	
CUX - C 2	- Currencies	
	This segment is used to specify usual currency applicable for the enterprise identified in the previous NAD segment.	
DTM - C 9	- Date/time/period	
	This segment is used to specify any dates associated with the payment terms.	
PCD - C 9	- Percentage details	
	This segment is used to specify percentages which will be allowed or charged if the invoicee pays (does not pay) to terms.	
MOA - C 9	- Monetary amount	
	This segment is used to indicate monetary amount related to the payment conditions.	
SG12 - C 999	- **CCI-MOA-QTY-CAV-DTM-MEA**	
	A group of segments providing party characteristic and -party characteristic details.	
CCI - M 1	- Characteristic/class id	
	This segment is used to specify the characteristics of the identified enterprise.	
MOA - C 9	- Monetary amount	
	This Segment is used to indicate monetary amount related to the preceding CCI-Segment.	
QTY - C 9	- Quantity	
	A segment to provide quantity information related to the party characteristics.	

4. Segments Description

CAV	- C	9	- Characteristic value This segment is used to further specify party characteristics for the identified enterprise.
DTM	- C	9	- Date/time/period This segment is used to indicate dates or times related to the process specified in the preceding CCI segment.
MEA	- C	9	- Measurements This segment is used to specify any measurements related to the currently identified characteristic identification.
SG13	- C	999	- **PRC-DTM-SG14** A group of segments for relating processes, entities and documents.
PRC	- M	1	- Process identification This segment is used to provide processing information for the enterprise identified in the preceding NAD Segment.
DTM	- C	9	- Date/time/period This segment is used to indicate dates or times related to the process specified in the preceding PRC segment.
SG14	- C	999	- **LIN-NAD-SG15** A group of segments for relating a line number and entity to a document.
LIN	- M	1	- Line item This segment is used to specifiy a line number.
NAD	- M	1	- Name and address This segment is used to identify the party, who's role is described in the preceding PRC segment.
SG15	- M	99	- **DOC** A group of segments to relate a document.
DOC	- M	1	- Document/message details This segment is used to identify any documentation related to the enterprise identified in the preceeding NAD segment.

<u>Party Information Summary Section</u>

UNT	- M	1	- Message trailer This segment is a mandatory UN/EDIFACT segment. It must always be the last segment in the message.
UNZ	- M	1	- Interchange trailer This segment is used to provide the trailer of an interchange.

5. Segments Layout

This section describes each segment used in the EANCOM® Party information message. The original EDIFACT segment layout is listed. The appropriate comments relevant to the EANCOM® subset are indicated.

Notes:

1. The segments are presented in the sequence in which they appear in the message. The segment or segment group tag is followed by the (M)andatory / (C)onditional indicator, the maximum number of occurrences and the segment description.

2. Reading from left to right, in column one, the data element tags and descriptions are shown, followed by in the second column the EDIFACT status (M or C), the field format, and the picture of the data elements. These first pieces of information constitute the original EDIFACT segment layout.

   Following the EDIFACT information, EANCOM® specific information is provided in the third, fourth, and fifth columns. In the third column a status indicator for the use of (C)onditional EDIFACT data elements (see 2.1 through 2.3 below), in the fourth column the restricted indicator (see point 3 on the following page), and in the fifth column notes and code values used for specific data elements in the message.

2.1 (M)andatory data elements in EDIFACT segments retain their status in EANCOM®.

2.2 Additionally, there are five types of status for data elements with a (C)onditional EDIFACT status, whether for simple, component or composite data elements. These are listed below and can be identified when relevant by the following abbreviations:

- REQUIRED	**R**	Indicates that the entity is required and must be sent.
- ADVISED	**A**	Indicates that the entity is advised or recommended.
- DEPENDENT	**D**	Indicates that the entity must be sent in certain conditions, as defined by the relevant explanatory note.
- OPTIONAL	**O**	Indicates that the entity is optional and may be sent at the discretion of the user.
- NOT USED	**N**	Indicates that the entity is not used and should be omitted.

2.3 If a composite is flagged as **N, NOT USED**, all data elements within that composite will have blank status indicators assigned to them.

3. Status indicators detailed in the fourth column which directly relate to the code values detailed in the fifth **column** may have two values:

- RESTRICTED	*****	A data element marked with an asterisk (*) in the fourth column indicates that the listed codes in column five are the only codes available for use with this data element, in this segment, in this message.
- OPEN		All data elements where coded representation of data is possible and a restricted set of code values is not indicated are open (no asterisk in fourth column). The available codes are listed in the EANCOM® Data Elements and Code Sets Directory. Code values may be given as examples or there may be a note on the format or type of code to be used.

4. Different colours are used for the code values in the segment details: restricted codes are in red and open codes in blue.

5. Segments Layout

Segment number: 1

UNA	- C	1 - Service string advice			
Function: To define the characters selected for use as delimiters and indicators in the rest of the interchange that follows.					
		EDIFACT	GS1	*	Description
UNA1	Component data element separator	M an1	**M**	*	Used as a separator between component data elements contained within a composite data element (default value: ":")
UNA2	Data element separator	M an1	**M**	*	Used to separate two simple or composite data elements (default value: "+")
UNA3	Decimal notation	M an1	**M**	*	Used to indicate the character used for decimal notation (default value:".")
UNA4	Release indicator	M an1	**M**	*	Used to restore any service character to its original specification (value: "?").
UNA5	Reserved for future use	M an1	**M**	*	(default value: space)
UNA6	Segment terminator	M an1	**M**	*	Used to indicate the end of segment data (default value: " ' ")

Segment Notes:

The service string advice shall begin with the upper case characters UNA immediately followed by six characters in the order shown below. The same character shall not be used in more than one position of the UNA.
This segment is used to inform the receiver of the interchange that a set of service string characters which are different to the default characters are being used.
When using the default set of service characters, the UNA segment need not be sent. If it is sent, it must immediately precede the UNB segment and contain the four service string characters (positions UNA1, UNA2, UNA4 and UNA6) selected by the interchange sender.
Regardless of whether or not all of the service string characters are being changed every data element within this segment must be filled, (i.e., if some default values are being used with user defined ones, both the default and user defined values must be specified).
When expressing the service string characters in the UNA segment, it is not necessary to include any element separators.
The use of the UNA segment is required when using a character set other than level A.
UNA:+.? '

5. Segments Layout

Segment number: 2

UNB - M 1 - Interchange header					
Function: To start, identify and specify an interchange.					
		EDIFACT	GS1	*	Description
S001	SYNTAX IDENTIFIER	M	**M**		See Part I chapter 5.2.7 and segment notes.
0001	Syntax identifier	M a4	**M**	*	UNOA = UN/ECE level A UNOB = UN/ECE level B UNOC = UN/ECE level C UNOD = UN/ECE level D UNOE = UN/ECE level E UNOF = UN/ECE level F
0002	Syntax version number	M n1	**M**	*	3 = Version 3
S002	INTERCHANGE SENDER	M	**M**		
0004	Sender identification	M an..35	**M**		GLN (n13)
0007	Partner identification code qualifier	C an..4	**R**	*	14 = GS1
0008	Address for reverse routing	C an..14	**O**		
S003	INTERCHANGE RECIPIENT	M	**M**		
0010	Recipient identification	M an..35	**M**		GLN (n13)
0007	Partner identification code qualifier	C an..4	**R**	*	14 = GS1
0014	Routing address	C an..14	**O**		
S004	DATE/TIME OF PREPARATION	M	**M**		
0017	Date of preparation	M n6	**M**		YYMMDD
0019	Time of preparation	M n4	**M**		HHMM
0020	Interchange control reference	M an..14	**M**		Unique reference identifying the interchange. Created by the interchange sender.
S005	RECIPIENT'S REFERENCE, PASSWORD	C	**O**		
0022	Recipient's reference/ password	M an..14	**M**		
0025	Recipient's reference/ password qualifier	C an2	**O**		
0026	Application reference	C an..14	**O**		Message identification if the interchange contains only one type of message.
0029	Processing priority code	C a1	**O**		A = Highest priority
0031	Acknowledgement request	C n1	**O**		1 = Requested
0032	Communications agreement ID	C an..35	**O**	*	EANCOM.....
0035	Test indicator	C n1	**O**		1 = Interchange is a test
Segment Notes: This segment is used to envelope the interchange, as well as to identify both, the party to whom the interchange is sent and the party who has sent the interchange. The principle of the UNB segment is the same as a physical envelope which covers one or more letters or documents, and which details, both the address where delivery is to take place and the address from where the envelope has come.					

5. Segments Layout

Segment number: 2

S001: The character encoding specified in basic code table of ISO/IEC 646 (7-bit coded character set for information interchange) shall be used for the interchange service string advice (if used) and up to and including the composite data element S001 'Syntax identifier' in the interchange header. The character repertoire used for the characters in an interchange shall be identified from the code value of data element 0001 in S001 'Syntax identifier' in the interchange header. The character repertoire identified does not apply to objects and/or encrypted data.
The default encoding technique for a particular repertoire shall be the encoding technique defined by its associated character set specification.
DE 0001: The recommended (default) character set for use in EANCOM® for international exchanges is character set A (UNOA). Should users wish to use character sets other than A, an agreement on which set to use should be reached on a bilateral basis before communications begin.
DE 0004, 0008, 0010, 0014, 0042 and 0046: Within EANCOM® the use of the Global Location Number (GLN) is recommended for the identification of the interchange sender and recipient.
DE 0008: Identification (e.g. a division) specified by the sender of the interchange, to be included if agreed, by the recipient in response interchanges, to facilitate internal routing.
DE 0042: Sub-level of sender internal identification, when further sub-level identification is required.
DE 0014: The address for routing, provided beforehand by the interchange recipient, is used by the interchange sender to inform the recipient of the internal address, within the latter's systems, to which the interchange should be routed. It is recommended that the GLN be used for this purpose.
DE 0007: Identification (e.g. a division) specified by the recipient of the interchange, to be included if agreed, by the sender in response interchanges, to facilitate internal routing.
DE 0046: Sub-level of recipient internal identification, when further sub-level identification is required.
DE S004: The date and time specified in this composite should be the date and time at which the interchange sender prepared the interchange. This date and time may not necessarily be the same as the date and time of contained messages.
DE 0020: The interchange control reference number is generated by the interchange sender and is used to identify uniquely each interchange. Should the interchange sender wish to re-use interchange control reference numbers, it is recommended that each number be preserved for at least a period of three months before being re-used. In order to guarantee uniqueness, the interchange control reference number should always be linked to the interchange sender's identification (DE 0004).
DE S005: The use of passwords must first be agreed bilaterally by the parties exchanging the interchange.
DE 0026: This data element is used to identify the application, on the interchange recipient's system, to which the interchange is directed. This data element may only be used if the interchange contains only one type of message, (e.g. only invoices). The reference used in this data element is assigned by the interchange sender.
DE 0031: This data element is used to indicate whether an acknowledgement to the interchange is required. The EANCOM® APERAK or CONTRL message should be used to provide acknowledgement of interchange receipt. In addition, the EANCOM® CONTRL message may be used to indicate when an interchange has been rejected due to syntax errors.
DE 0032: This data element is used to identify any underlying agreements which control the exchange of data. Within EANCOM® , the identity of such agreements must start with the letters 'EANCOM', the remaining characters within the data element being filled according to bilateral agreements.

```
UNB+UNOA:3+5412345678908:14+8798765432106:14+020102:1000+12345555+++++EANCOMREF 52'
```

5. Segments Layout

Segment number: 3

UNH	- M	1 - Message header			
Function: To head, identify and specify a message.					
		EDIFACT	GS1	*	Description
0062	Message reference number	M an..14	**M**		Senders unique message reference. Sequence number of messages in the interchange. DE 0062 in UNT will have the same value. Generated by the sender.
S009	MESSAGE IDENTIFIER	M	**M**		
0065	Message type	M an..6	**M**	*	PARTIN = Party information message
0052	Message version number	M an..3	**M**	*	D = Draft version/UN/EDIFACT Directory
0054	Message release number	M an..3	**M**	*	01B = Release 2001 - B
0051	Controlling agency	M an..2	**M**	*	UN = UN/CEFACT
0057	Association assigned code	C an..6	**R**	*	EAN009 = GS1 version control number (GS1 Permanent Code) Indicates that the message is the EANCOM version 009 of the UNSM Party information.
0068	Common access reference	C an..35	**N**		
S010	STATUS OF THE TRANSFER	C	**N**		
0070	Sequence of transfers	M n..2			
0073	First and last transfer	C a1			

Segment Notes:

This segment is used to head, identify and specify a message.
DE'S 0065, 0052, 0054, and 0051: Indicate that the message is a UNSM Party Information message based on the D.01B directory under the control of the United Nations.

Example:
UNH+ME000001+PARTIN:D:01B:UN:EAN008'

5. Segments Layout

Segment number: 4

BGM	- M	1 - Beginning of message			
Function: To indicate the type and function of a message and to transmit the identifying number.					
		EDIFACT	GS1	*	Description
C002	DOCUMENT/MESSAGE NAME	C	**R**		
1001	Document name code	C an..3	**R**	*	10 = Party information
1131	Code list identification code	C an..17	**N**		
3055	Code list responsible agency code	C an..3	**N**		
1000	Document name	C an..35	**O**		
C106	DOCUMENT/MESSAGE IDENTIFICATION	C	**R**		
1004	Document identifier	C an..35	**R**		Party Information Number assigned by the document sender. For global unique identification of documents Global Document Type Identifier (GDTI) is available.
1056	Version identifier	C an..9	**N**		
1060	Revision identifier	C an..6	**N**		
1225	Message function code	C an..3	**R**	*	1 = Cancellation 2 = Addition 3 = Deletion 4 = Change 5 = Replace 6 = Confirmation 9 = Original The message function, coded is a critical data element in this segment. It applies to all transactions indicated in the message. The following definitions apply to the restricted codes : 1 = Cancellation : This code is used to cancel an entire previous message identified in the RFF segment. 2 = Addition : This code is used for new parties or for providing information about existing parties for the first time to the trading partner. 3 = Deletion - This code is used to delete party records from a trading partner's database. 4 = Change : This code is used to modify any information relevant to the parties already known by the trading partner. Only the segments containing modified information need to be sent. All previously sent data in a modified segment must be provided. All occurrences (repetitions) of a modified segment must be provided (whether modified or not). 5 = Replace - To replace a previously sent message identified in the RFF segment of the heading section. 6 = Confirmation : This code is used when party information is sent again for confirmation purposes. 9 = Original - An original transmission of a party information message.
4343	Response type code	C an..3	**N**		

5. Segments Layout

Segment number: 4

Segment Notes:

This segment is used to indicate the type and function of a message and to transmit the identifying number.

Example:
BGM+10+PI4356+4'

5. Segments Layout

Segment number: 5

DTM	- M	5 - Date/time/period			
Function: To specify date, and/or time, or period.					
		EDIFACT	GS1	*	Description
C507	DATE/TIME/PERIOD	M	**M**		
2005	Date or time or period function code qualifier	M an..3	**M**	*	137 = Document/message date/time 194 = Start date/time 206 = End date/time
2380	Date or time or period value	C an..35	**R**		
2379	Date or time or period format code	C an..3	**R**		102 = CCYYMMDD 718 = CCYYMMDD-CCYYMMDD

Segment Notes:

This segment is used to specify the date or period of the Party Information message.
DE 2005: Identification of the 'Document/message date/time' (code value 137) is mandatory in an EANCOM message.

Example:
DTM+137:20021201:102'

5. Segments Layout

Segment number: 6

FII	- C	10 - Financial institution information			
Function: To identify an account and a related financial institution.					
		EDIFACT	GS1	*	Description
3035	Party function code qualifier	M an..3	**M**	*	PB = Paying financial institution RB = Receiving financial institution
C078	ACCOUNT HOLDER IDENTIFICATION	C	**R**		
3194	Account holder identifier	C an..35	**R**		
3192	Account holder name	C an..35	**O**		
3192	Account holder name	C an..35	**O**		
6345	Currency identification code	C an..3	**O**		ISO 4217 three alpha
C088	INSTITUTION IDENTIFICATION	C	**D**		C088: In some countries it is possible to identify within the account number the institution name and branch. Where this is possible the composite C088 will not be required. For international transactions it is recommended that the need for composite C088 should be checked before sending the message. When using C088 it is recommended that if data element 3433 is not used that 3432 be used, and that when data element 3434 is not used that data element 3436 be used.
3433	Institution name code	C an..11	**A**		
1131	Code list identification code	C an..17	**O**		25 = Bank identification
3055	Code list responsible agency code	C an..3	**D**		5 = ISO (International Organization for Standardization)
3434	Institution branch identifier	C an..17	**O**		
1131	Code list identification code	C an..17	**O**		25 = Bank identification
3055	Code list responsible agency code	C an..3	**D**		5 = ISO (International Organization for Standardization)
3432	Institution name	C an..70	**O**		
3436	Institution branch location name	C an..70	**O**		
3207	Country name code	C an..3	**O**		ISO 3166 two alpha code
Segment Notes: This segment is used to identify the financial institution and account details of the Party Information sender. Example: FII+PB+1234567890+KREDBEBB:25:5'					

5. Segments Layout

Segment number: 7

FTX	- C	5 - Free text			
Function: To provide free form or coded text information.					
		EDIFACT	GS1	*	Description
4451	Text subject code qualifier	M an..3	**M**		GEN = Entire transaction set ZZZ = Mutually defined
4453	Free text function code	C an..3	**O**	*	1 = Text for subsequent use
C107	TEXT REFERENCE	C	**D**		This composite is only used when trading partners have agreed to use mutually defined code values.
4441	Free text value code	M an..17	**M**		001 = Standard text between trading partners
1131	Code list identification code	C an..17	**O**		
3055	Code list responsible agency code	C an..3	**D**		91 = Assigned by supplier or supplier's agent 92 = Assigned by buyer or buyer's agent
C108	TEXT LITERAL	C	**D**		This composite is only used if coded text can not be used.
4440	Free text value	M an..512	**M**		
4440	Free text value	C an..512	**O**		
4440	Free text value	C an..512	**O**		
4440	Free text value	C an..512	**O**		
4440	Free text value	C an..512	**O**		
3453	Language name code	C an..3	**D**		ISO 639 two alpha code This data element is only used when non coded free text has been provided in data element C108.
4447	Free text format code	C an..3	**N**		

Segment Notes:

This segment is used to provide free or coded text information related to the complete party information message.
Use of this segment is not recommended in free form since it inhibits automatic processing of the party information. Coded references to standard texts is an available functionality which enables automatic processing and reduces transmission overheads.
Standard texts should be mutually defined among trading partners and can be used to cover legal and other requirements.

Example:
(E.g. standard text 001 = This confirms our previous transmissions).
FTX+GEN+1+001::91'

5. Segments Layout

Segment number: 8

SG1	- C	5 -	RFF-DTM
RFF	- M	1 -	Reference

Function:

To specify a reference.

		EDIFACT	GS1	*	Description
C506	REFERENCE	M	**M**		
1153	Reference code qualifier	M an..3	**M**	*	ASG = Party information message reference ASO = Password The code ASG is used when identifying a previous PARTIN message.
1154	Reference identifier	C an..70	**R**		
1156	Document line identifier	C an..6	**N**		
4000	Reference version identifier	C an..35	**N**		
1060	Revision identifier	C an..6	**N**		

Segment Notes:

This segment is used to give references.

Example:
RFF+ASG:9888112'

5. Segments Layout

Segment number: 9

SG1	- C	5 -	RFF-DTM
DTM	- C	1 -	Date/time/period

Function:

To specify date, and/or time, or period.

		EDIFACT	GS1	*	Description
C507	DATE/TIME/PERIOD	M	**M**		
2005	Date or time or period function code qualifier	M an..3	**M**	*	171 = Reference date/time
2380	Date or time or period value	C an..35	**R**		
2379	Date or time or period format code	C an..3	**R**		102 = CCYYMMDD 718 = CCYYMMDD-CCYYMMDD

Segment Notes:

This segment is used to indicate dates related to the references specified in the preceding RFF segment.

Example:
DTM+171:20020101:102'

5. Segments Layout

Segment number: 10

SG2	- C	2 -	NAD-SG3
NAD	- M	1 -	Name and address

Function:

To specify the name/address and their related function, either by C082 only and/or unstructured by C058 or structured by C080 thru 3207.

		EDIFACT	GS1	*	Description
3035	Party function code qualifier	M an..3	**M**		FR = Message from MR = Message recipient
C082	PARTY IDENTIFICATION DETAILS	C	**A**		
3039	Party identifier	M an..35	**M**		For identification of parties it is recommended to use GLN - Format n13.
1131	Code list identification code	C an..17	**N**		
3055	Code list responsible agency code	C an..3	**R**	*	9 = GS1
C058	NAME AND ADDRESS	C	**O**		This composite may only be used to fulfill the requirements of directive 2003/58/EC, article 4.
3124	Name and address description	M an..35	**M**		
3124	Name and address description	C an..35	**O**		
3124	Name and address description	C an..35	**O**		
3124	Name and address description	C an..35	**O**		
3124	Name and address description	C an..35	**O**		
C080	PARTY NAME	C	**D**		
3036	Party name	M an..35	**M**		Party Name in clear text.
3036	Party name	C an..35	**O**		
3036	Party name	C an..35	**O**		
3036	Party name	C an..35	**O**		
3036	Party name	C an..35	**O**		
3045	Party name format code	C an..3	**O**		
C059	STREET	C	**D**		
3042	Street and number or post office box identifier	M an..35	**M**		Building Name/Number and Street Name
3042	Street and number or post office box identifier	C an..35	**O**		
3042	Street and number or post office box identifier	C an..35	**O**		
3042	Street and number or post office box identifier	C an..35	**O**		
3164	City name	C an..35	**D**		City/Town, clear text
C819	COUNTRY SUB-ENTITY DETAILS	C	**D**		
3229	Country sub-entity name code	C an..9	**O**		
1131	Code list identification code	C an..17	**O**		
3055	Code list responsible agency code	C an..3	**O**		

5. Segments Layout

Segment number: 10

		EDIFACT	GS1	*	Description
3228	Country sub-entity name	C an..70	**O**		County/State, clear text.
3251	Postal identification code	C an..17	**D**		Postal Code
3207	Country name code	C an..3	**D**		ISO 3166 two alpha code

Segment Notes:

This segment is used to identify the trading partners exchanging Party Information data. Identification of the sender and receiver is mandatory in the Party Information message.

Example:
NAD+FR+5412345000013::9'
NAD+MR+4012345500004::9'

Dependency Notes:
The following composites and data elements are only used when a coded name and address can not be used.
The affected composites and data elements are as follows:
C080 - C059 - 3164 - C819 - 3251 - 3207

5. Segments Layout

Segment number: 11

SG2	- C	2 -	NAD-SG3
SG3	- C	5 -	CTA-COM
CTA	- M	1 -	Contact information

Function:

To identify a person or a department to whom communication should be directed.

		EDIFACT	GS1	*	Description
3139	Contact function code	C an..3	**R**		AD = Accounting contact IC = Information contact OC = Order contact
C056	DEPARTMENT OR EMPLOYEE DETAILS	C	**O**		
3413	Department or employee name code	C an..17	**O**		
3412	Department or employee name	C an..35	**O**		

Segment Notes:

This segment is used to identify a department and person within the party specified in the previous NAD segment.

Example:
CTA+AD+:DAVID BOYD'

5. Segments Layout

Segment number: 12

SG2	- C	2 -	NAD-SG3
SG3	- C	5 -	CTA-COM
COM	- C	5 -	Communication contact

Function:

To identify a communication number of a department or a person to whom communication should be directed.

		EDIFACT	GS1	*	Description
C076	COMMUNICATION CONTACT	M	**M**		
3148	Communication address identifier	M an..512	**M**		
3155	Communication address code qualifier	M an..3	**M**		AO = Uniform Resource Location (URL) EM = Electronic mail TE = Telephone

Segment Notes:

This segment is used to identify the communications number and the type of communications used for the person or department identified in the CTA segment.

Example:
COM+00322256541:TE'

5. Segments Layout

Segment number: 13

UNS - M 1 - Section control				
Function: To separate header, detail and summary sections of a message. Notes: 1. To be used by message designers when required to avoid ambiguities. Mandatory only if specified for the type of message concerned.				
	EDIFACT	GS1	*	Description
0081 Section identification	M a1	**M**	*	D = Header/detail section separation
Segment Notes: This segment marks the end of the header information and the beginning of the details information. Example: UNS+D'				

5. Segments Layout

Segment number: 14

SG4	- C	200000	- NAD-DTM-FII-IDE-FTX-TAX-HYN-SG5-SG6-SG7-SG8-SG9-SG10-SG12-SG13
NAD	- M	1	- Name and address

Function:

To specify the name/address and their related function, either by C082 only and/or unstructured by C058 or structured by C080 thru 3207.

		EDIFACT	GS1	*	Description
3035	Party function code qualifier	M an..3	**M**		BY = Buyer DFZ = Article information responsible party DGA = Price information responsible party DGB = Invoice processing party DP = Delivery party IPA = Party information party (GS1 Temporary Code) IV = Invoicee SN = Store number SR = Supplier's agent/representative SU = Supplier X48 = Corporate identity (GS1 Temporary Code)
C082	PARTY IDENTIFICATION DETAILS	C	**A**		
3039	Party identifier	M an..35	**M**		For identification of parties it is recommended to use GLN - Format n13.
1131	Code list identification code	C an..17	**N**		
3055	Code list responsible agency code	C an..3	**R**	*	9 = GS1
C058	NAME AND ADDRESS	C	**O**		This composite may only be used to fulfill the requirements of directive 2003/58/EC, article 4.
3124	Name and address description	M an..35	**M**		
3124	Name and address description	C an..35	**O**		
3124	Name and address description	C an..35	**O**		
3124	Name and address description	C an..35	**O**		
3124	Name and address description	C an..35	**O**		
C080	PARTY NAME	C	**D**		
3036	Party name	M an..35	**M**		Party Name in clear text.
3036	Party name	C an..35	**O**		
3036	Party name	C an..35	**O**		
3036	Party name	C an..35	**O**		
3036	Party name	C an..35	**O**		
3045	Party name format code	C an..3	**O**		
C059	STREET	C	**D**		
3042	Street and number or post office box identifier	M an..35	**M**		Building Name/Number and Street Name
3042	Street and number or post office box identifier	C an..35	**O**		
3042	Street and number or post office box identifier	C an..35	**O**		

5. Segments Layout

Segment number: 14

		EDIFACT	GS1	*	Description
3042	Street and number or post office box identifier	C an..35	**O**		
3164	City name	C an..35	**D**		City/Town name, clear text
C819	COUNTRY SUB-ENTITY DETAILS	C	**D**		
3229	Country sub-entity name code	C an..9	**O**		
1131	Code list identification code	C an..17	**O**		
3055	Code list responsible agency code	C an..3	**O**		
3228	Country sub-entity name	C an..70	**O**		County/State, clear text.
3251	Postal identification code	C an..17	**D**		Postal Code
3207	Country name code	C an..3	**D**		ISO 3166 two alpha code

Segment Notes:

This segment is used to specify the party being identified. Identification of at least one party is mandatory in this segment as the NAD segment at detail level is the trigger segment to the detail information.

Example:
NAD+BY+4012345500004::9++GS1+Avenue Louise 326+BRUXELLES++B-1050+BE'

Dependency Notes:
The following composites and data elements are only used when a coded name and address can not be used.
The affected composites and data elements are as follows:
C080 - C059 - 3164 - C819 - 3251 - 3207

5. Segments Layout

Segment number: 15

SG4	- C	200000	-	NAD-DTM-FII-IDE-FTX-TAX-HYN-SG5-SG6-SG7-SG8-SG9-SG10-SG12-SG13
DTM	- C	5	-	Date/time/period

Function:

To specify date, and/or time, or period.

		EDIFACT	GS1	*	Description
C507	DATE/TIME/PERIOD	M	**M**		
2005	Date or time or period function code qualifier	M an..3	**M**		194 = Start date/time 206 = End date/time
2380	Date or time or period value	C an..35	**R**		
2379	Date or time or period format code	C an..3	**R**		102 = CCYYMMDD 203 = CCYYMMDDHHMM 718 = CCYYMMDD-CCYYMMDD

Segment Notes:

This segment is used to specify any dates or times associated with the party identified in the previous NAD segment.

Example:
DTM+194:20020101:102'

5. Segments Layout

Segment number: 16

SG4	- C	200000 -	NAD-DTM-FII-IDE-FTX-TAX-HYN-SG5-SG6-SG7-SG8-SG9-SG10-SG12-SG13
FII	- C	10 -	Financial institution information

Function:

To identify an account and a related financial institution.

		EDIFACT	GS1	*	Description
3035	Party function code qualifier	M an..3	**M**		PB = Paying financial institution RB = Receiving financial institution
C078	ACCOUNT HOLDER IDENTIFICATION	C	**R**		
3194	Account holder identifier	C an..35	**R**		
3192	Account holder name	C an..35	**O**		
3192	Account holder name	C an..35	**N**		
6345	Currency identification code	C an..3	**O**		ISO 4217 three alpha code
C088	INSTITUTION IDENTIFICATION	C	**D**		In some countries it is possible to identify within the account number the institution name and branch. Where this is possible the composite C088 will not be required. For international transactions it is recommended that the need for composite C088 should be checked before sending the message. When using C088 it is recommended that if data element 3433 is not used that 3432 be used, and that when data element 3434 is not used that data element 3436 be used.
3433	Institution name code	C an..11	**A**		
1131	Code list identification code	C an..17	**O**		25 = Bank identification
3055	Code list responsible agency code	C an..3	**D**		5 = ISO (International Organization for Standardization)
3434	Institution branch identifier	C an..17	**O**		
1131	Code list identification code	C an..17	**O**		25 = Bank identification
3055	Code list responsible agency code	C an..3	**D**		5 = ISO (International Organization for Standardization)
3432	Institution name	C an..70	**O**		
3436	Institution branch location name	C an..70	**O**		
3207	Country name code	C an..3	**O**		ISO 3166 two alpha code

Segment Notes:

This segment is used to identify the financial institution and account details of the Party identified in the preceding NAD segment.

Example:
FII+PB+1234567890+KREDBEBB:25:5'

5. Segments Layout

Segment number: 17

SG4	- C	200000 -	NAD-DTM-FII-IDE-FTX-TAX-HYN-SG5-SG6-SG7-SG8-SG9-SG10-SG12-SG13
IDE	- C	9 -	Identity

Function:
To identify an object.

		EDIFACT	GS1	*	Description
7495	Object type code qualifier	M an..3	**M**		Code giving the party identification. BY = Buyer (GS1 Permanent Code) CO = Corporate office (GS1 Permanent Code) DP = Delivery party (GS1 Permanent Code) II = Issuer of invoice (GS1 Permanent Code) IV = Invoicee (GS1 Permanent Code) NFP = No function priority allocated (GS1 Permanent Code) OB = Ordered by (GS1 Permanent Code) PE = Payee (GS1 Permanent Code) PR = Payer (GS1 Permanent Code) QP = Quotation party (GS1 Permanent Code) SE = Seller (GS1 Permanent Code) SF = Ship from (GS1 Permanent Code) SH = Shipper (GS1 Permanent Code) ST = Ship to (GS1 Permanent Code) SU = Supplier (GS1 Permanent Code) X48 = Corporate identity (GS1 Permanent Code)
C206	IDENTIFICATION NUMBER	C	**N**		
7402	Object identifier	M an..35			
7405	Object identification code qualifier	C an..3			
4405	Status description code	C an..3			
C082	PARTY IDENTIFICATION DETAILS	C	**O**		
3039	Party identifier	M an..35	**M**		For identification of parties it is recommended to use GLN - Format n13.
1131	Code list identification code	C an..17	**N**		
3055	Code list responsible agency code	C an..3	**R**	*	9 = GS1
4405	Status description code	C an..3	**O**		
1222	Configuration level number	C n..2	**O**		
C778	POSITION IDENTIFICATION	C	**O**		
7164	Hierarchical structure level identifier	C an..35	**O**		
1050	Sequence position identifier	C an..10	**O**		
C240	PRODUCT CHARACTERISTIC	C	**N**		
7037	Characteristic description code	M an..17			
1131	Code list identification code	C an..17			
3055	Code list responsible agency code	C an..3			

5. Segments Layout

Segment number: 17

	EDIFACT	GS1	*	Description
7036 Characteristic description	C an..35			
7036 Characteristic description	C an..35			

Segment Notes:

This segment is used to provide additional/alternative identification of the function(s) within the party specified in the previous NAD segment.

Example:
IDE+0B++4012345500004::9'

5. Segments Layout

Segment number: 18

SG4	- C	200000 -	NAD-DTM-FII-IDE-FTX-TAX-HYN-SG5-SG6-SG7-SG8-SG9-SG10-SG12-SG13
FTX	- C	9 -	Free text

Function:

To provide free form or coded text information.

		EDIFACT	GS1	*	Description
4451	Text subject code qualifier	M an..3	**M**		AIQ = Party information
4453	Free text function code	C an..3	**O**	*	1 = Text for subsequent use
C107	TEXT REFERENCE	C	**D**		This composite is only used when trading partners have agreed to use mutually defined code values.
4441	Free text value code	M an..17	**M**		001 = Standard text between trading partners
1131	Code list identification code	C an..17	**O**		
3055	Code list responsible agency code	C an..3	**D**		91 = Assigned by supplier or supplier's agent 92 = Assigned by buyer or buyer's agent
C108	TEXT LITERAL	C	**D**		This composite is only used if coded text can not be used.
4440	Free text value	M an..512	**M**		
4440	Free text value	C an..512	**O**		
4440	Free text value	C an..512	**O**		
4440	Free text value	C an..512	**O**		
4440	Free text value	C an..512	**O**		
3453	Language name code	C an..3	**D**		ISO 639 two alpha code This data element is only used when non coded free text has been provided in data element C108.
4447	Free text format code	C an..3	**N**		

Segment Notes:

This segment is used to provide free or coded text information related to the current party.
Use of this segment is not recommended in free form since it inhibits automatic processing of the party information. Coded references to standard texts is an available functionality which enables automatic processing and reduces transmission overheads.
Standard texts should be mutually defined among trading partners and can be used to cover legal and other requirements.

Example:
FTX+AIQ+1+001::91'
(E.g. standard text 001 = This confirms our previous transmissions).

5. Segments Layout

Segment number: 19

SG4	- C	200000	- NAD-DTM-FII-IDE-FTX-TAX-HYN-SG5-SG6-SG7-SG8-SG9-SG10-SG12-SG13
TAX	- C	9	- Duty/tax/fee details

Function:

To specify relevant duty/tax/fee information.

		EDIFACT	GS1	*	Description
5283	Duty or tax or fee function code qualifier	M an..3	**M**		5 = Customs duty 7 = Tax
C241	DUTY/TAX/FEE TYPE	C	**D**		
5153	Duty or tax or fee type name code	C an..3	**O**		GST = Goods and services tax VAT = Value added tax
1131	Code list identification code	C an..17	**O**		
3055	Code list responsible agency code	C an..3	**D**		
5152	Duty or tax or fee type name	C an..35	**O**		
C533	DUTY/TAX/FEE ACCOUNT DETAIL	C	**O**		
5289	Duty or tax or fee account code	M an..6	**M**		
1131	Code list identification code	C an..17	**O**		
3055	Code list responsible agency code	C an..3	**D**		
5286	Duty or tax or fee assessment basis value	C an..15	**O**		
C243	DUTY/TAX/FEE DETAIL	C	**A**		
5279	Duty or tax or fee rate code	C an..7	**O**		
1131	Code list identification code	C an..17	**O**		
3055	Code list responsible agency code	C an..3	**D**		
5278	Duty or tax or fee rate	C an..17	**R**		The actual rate of tax/duty.
5273	Duty or tax or fee rate basis code	C an..12	**O**		
1131	Code list identification code	C an..17	**O**		
3055	Code list responsible agency code	C an..3	**D**		
5305	Duty or tax or fee category code	C an..3	**D**		A = Mixed tax rate E = Exempt from tax S = Standard rate
3446	Party tax identifier	C an..20	**O**		
1227	Calculation sequence code	C an..3	**N**		

Segment Notes:

This TAX segment is used to indicate the usual tax situation for the enterprise identified in the previous NAD segment.

Example:
TAX+7+VAT+++:::21+S'

Dependency Notes:

5. Segments Layout

Segment number: 19

DE C241 and 5305: Tax types and categories will vary from country to country. They should be defined by national guidelines.

5. Segments Layout

Segment number: 20

SG4	- C	200000 -	NAD-DTM-FII-IDE-FTX-TAX-HYN-SG5-SG6-SG7-SG8-SG9-SG10-SG12-SG13
HYN	- C	9 -	Hierarchy information

Function:

A segment to identify hierarchical connections from a given item to a higher or lower levelled item or to identify dependencies among the content of hierarchically related groups of data.

		EDIFACT	GS1	*	Description
7173	Hierarchy object code qualifier	M an..3	**M**	*	PA = Party or location hierarchy link (GS1 Temporary Code)
7171	Hierarchical structure relationship code	C an..3	**R**		1 = Parent 2 = Child This data element is used to indicate whether the identifier (DE 7140) specified in this segment is a parent or child party of the current party.
1229	Action request/notification description code	C an..3	**A**		
C212	ITEM NUMBER IDENTIFICATION	C	**R**		
7140	Item identifier	C an..35	**R**		GLN - format n13
7143	Item type identification code	C an..3	**R**	*	GLN = Global Location Number (GS1 Temporary Code)
1131	Code list identification code	C an..17	**N**		
3055	Code list responsible agency code	C an..3	**R**	*	9 = GS1
7166	Hierarchical structure parent identifier	C an..35	**N**		

Segment Notes:

This segment is used to provide hierarchical connections from the current party to a higher or lower level party.

Example:
HYN+PA+1++5410013111009:GLN::9'
This example indicates that the GLN 5410013111009 is a parent in the party hierarchy to the GLN 5412345123453 identified in the NAD segment.

5. Segments Layout

Segment number: 21

SG4	- C	200000	-	NAD-DTM-FII-IDE-FTX-TAX-HYN-SG5-SG6-SG7-SG8-SG9-SG10-SG12-SG13
SG5	- C	99	-	LOC
LOC	- M	1	-	Place/location identification

Function:

To identify a place or a location and/or related locations.

		EDIFACT	GS1	*	Description
3227	Location function code qualifier	M an..3	**M**	*	7 = Place of delivery
C517	LOCATION IDENTIFICATION	C	**N**		
3225	Location name code	C an..25			
1131	Code list identification code	C an..17			
3055	Code list responsible agency code	C an..3			
3224	Location name	C an..256			
C519	RELATED LOCATION ONE IDENTIFICATION	C	**O**		
3223	First related location name code	C an..25	**R**	*	LATDMS = Latitude DMS (GS1 Permanent Code) LATDEC = Latitude DEC (GS1 Permanent Code)
1131	Code list identification code	C an..17	**O**		
3055	Code list responsible agency code	C an..3	**R**	*	9 = GS1
3222	First related location name	C an..70	**O**		
C553	RELATED LOCATION TWO IDENTIFICATION	C	**O**		
3233	Second related location name code	C an..25	**R**	*	LONDEC = Longitude DEC (GS1 Permanent Code) LONDMS = Longitude DMS (GS1 Permanent Code)
1131	Code list identification code	C an..17	**O**		
3055	Code list responsible agency code	C an..3	**R**	*	9 = GS1
3232	Second related location name	C an..70	**C**		
5479	Relation code	C an..3	**N**		

Segment Notes:

This segment is used to identify the location via geographical coordinates when no addresses or GLN already exists (road under construction, building sector, etc…).
LOC+7++LATDMS::9:503509N+LONDMS::9:0053611E’
LOC+7++LATDEC::9:50.5861N+LONDEC::9:005.6033E’

5. Segments Layout

Segment number: 22

SG4	- C	200000	-	NAD-DTM-FII-IDE-FTX-TAX-HYN-SG5-SG6-SG7-SG8-SG9-SG10-SG12-SG13
SG6	- C	15	-	RFF-DTM
RFF	- M	1	-	Reference

Function:

To specify a reference.

		EDIFACT	GS1	*	Description
C506	REFERENCE	M	**M**		
1153	Reference code qualifier	M an..3	**M**		AQQ = Activite Principale Exercee (APE) identifier AVG = Slaughterhouse approval number AVH = Meat cutting plant approval number CR = Customer reference number CT = Contract number FC = Fiscal number GN = Government reference number IP = Import licence number PL = Price list number VA = VAT registration number XA = Company/place registration number YC1 = Additional party identification (GS1 Temporary Code)
1154	Reference identifier	C an..70	**R**		
1156	Document line identifier	C an..6	**N**		
4000	Reference version identifier	C an..35	**N**		
1060	Revision identifier	C an..6	**N**		

Segment Notes:

This segment is used to specify any references which are particular to the party identified in the preceding NAD segment, e.g., VAT registration number.

Example:
RFF+VA:4568112'

5. Segments Layout

Segment number: 23

SG4	- C	200000	-	NAD-DTM-FII-IDE-FTX-TAX-HYN-SG5-SG6-SG7-SG8-SG9-SG10-SG12-SG13
SG6	- C	15	-	RFF-DTM
DTM	- C	1	-	Date/time/period

Function:

To specify date, and/or time, or period.

		EDIFACT	GS1	*	Description
C507	DATE/TIME/PERIOD	M	**M**		
2005	Date or time or period function code qualifier	M an..3	**M**	*	171 = Reference date/time
2380	Date or time or period value	C an..35	**R**		
2379	Date or time or period format code	C an..3	**R**		102 = CCYYMMDD 718 = CCYYMMDD-CCYYMMDD

Segment Notes:

This segment is used to indicate dates related to the references specified in the preceding RFF segment.

Example:
DTM+171:20020101:102'

5. Segments Layout

Segment number: 24

SG4	- C	200000	-	NAD-DTM-FII-IDE-FTX-TAX-HYN-SG5-SG6-SG7-SG8-SG9-SG10-SG12-SG13
SG7	- C	5	-	CTA-COM
CTA	- M	1	-	Contact information

Function:

To identify a person or a department to whom communication should be directed.

		EDIFACT	GS1	*	Description
3139	Contact function code	C an..3	**R**		OC = Order contact SA = Sales administration
C056	DEPARTMENT OR EMPLOYEE DETAILS	C	**O**		
3413	Department or employee name code	C an..17	**O**		
3412	Department or employee name	C an..35	**O**		

Segment Notes:

This segment is used to identify a contact department and/or person within the party specified in the previous NAD segment.

Example:
CTA+SA+:D BOWLES'

5. Segments Layout

Segment number: 25

SG4	- C	200000	-	NAD-DTM-FII-IDE-FTX-TAX-HYN-SG5-SG6-SG7-SG8-SG9-SG10-SG12-SG13
SG7	- C	5	-	CTA-COM
COM	- C	5	-	Communication contact

Function:

To identify a communication number of a department or a person to whom communication should be directed.

		EDIFACT	GS1	*	Description
C076	COMMUNICATION CONTACT	M	**M**		
3148	Communication address identifier	M an..512	**M**		
3155	Communication address code qualifier	M an..3	**M**		AO = Uniform Resource Location (URL) EM = Electronic mail TE = Telephone

Segment Notes:

This segment is used to identify the communications number and the type of communications used for the person or department identified in the CTA segment.

Example:
COM+00322256631:FX'

5. Segments Layout

Segment number: 26

SG4	- C	200000	-	NAD-DTM-FII-IDE-FTX-TAX-HYN-SG5-SG6-SG7-SG8-SG9-SG10-SG12-SG13
SG8	- C	10	-	SCC-DTM
SCC	- M	1	-	Scheduling conditions

Function:

To specify scheduling conditions.

		EDIFACT	GS1	*	Description
4017	Delivery plan commitment level code	M an..3	**M**		1 = Firm 4 = Planning/forecast
4493	Delivery instruction code	C an..3	**O**		DA = Do not deliver after DB = Do not deliver before
C329	PATTERN DESCRIPTION	C	**O**		
2013	Frequency code	C an..3	**O**		M = Monthly (calendar months) Q = Quarterly (calendar quarters) S = Semi-annually (calendar year) W = Weekly Y = Daily
2015	Despatch pattern code	C an..3	**O**		10 = Monday through Friday 11 = Monday through Saturday 12 = Monday through Sunday 13 = Monday 14 = Tuesday 15 = Wednesday 16 = Thursday 17 = Friday
2017	Despatch pattern timing code	C an..3	**O**		D = A.M. E = P.M. H = 24 hour clock

Segment Notes:

This segment is used to indicate any delivery schedules for the current party.

Example:
SCC+1++W:14:D'
Firm schedule, every Tuesday morning.

5. Segments Layout

Segment number: 27

SG4	- C	200000	-	NAD-DTM-FII-IDE-FTX-TAX-HYN-SG5-SG6-SG7-SG8-SG9-SG10-SG12-SG13
SG8	- C	10	-	SCC-DTM
DTM	- C	2	-	Date/time/period

Function:

To specify date, and/or time, or period.

		EDIFACT	GS1	*	Description
C507	DATE/TIME/PERIOD	M	**M**		
2005	Date or time or period function code qualifier	M an..3	**M**	*	2 = Delivery date/time, requested 4 = Order date/time 63 = Delivery date/time, latest 64 = Delivery date/time, earliest
2380	Date or time or period value	C an..35	**R**		
2379	Date or time or period format code	C an..3	**R**		102 = CCYYMMDD 401 = HHMM 501 = HHMMHHMM 718 = CCYYMMDD-CCYYMMDD

Segment Notes:

This segment is used to indicate date/time information relevant to the delivery schedule provided in the SCC segment.

Example:
DTM+2:20020120:102'

5. Segments Layout

Segment number: 28

SG4	- C	200000	-	NAD-DTM-FII-IDE-FTX-TAX-HYN-SG5-SG6-SG7-SG8-SG9-SG10-SG12-SG13
SG9	- C	1	-	TOD-LOC
TOD	- M	1	-	Terms of delivery or transport

Function:

To specify terms of delivery or transport.

		EDIFACT	GS1	*	Description
4055	Delivery or transport terms function code	C an..3	**R**		3 = Price and despatch condition 6 = Delivery condition
4215	Transport charges payment method code	C an..3	**O**		DF = Defined by buyer and supplier PC = Prepaid but charged to customer
C100	TERMS OF DELIVERY OR TRANSPORT	C	**A**		
4053	Delivery or transport terms description code	C an..3	**R**		INCOTERMS (See EANCOM Codes Set) If INCOTERMS are applicable, then DE 3055 has to contain code value "9" and DE 1131 must be used.
1131	Code list identification code	C an..17	**D**		
3055	Code list responsible agency code	C an..3	**D**		
4052	Delivery or transport terms description	C an..70	**O**		
4052	Delivery or transport terms description	C an..70	**O**		

Segment Notes:

This segment is used to specify the terms of delivery for the specified location in the previous NAD segment.

Example:
TOD+3++CIF:2E:9'

Dependency Notes:
Data elements 1131 and 3055 are only used if specific terms of delivery codes, which are outside those recommended by EDIFACT, are being used.

5. Segments Layout

Segment number: 29

SG4	- C	200000 -	NAD-DTM-FII-IDE-FTX-TAX-HYN-SG5-SG6-SG7-SG8-SG9-SG10-SG12-SG13
SG9	- C	1 -	TOD-LOC
LOC	- C	1 -	Place/location identification

Function:

To identify a place or a location and/or related locations.

		EDIFACT	GS1	*	Description
3227	Location function code qualifier	M an..3	**M**		1 = Place of terms of delivery 5 = Place of departure 7 = Place of delivery
C517	LOCATION IDENTIFICATION	C	**A**		
3225	Location name code	C an..25	**A**		UN/LOCODE
1131	Code list identification code	C an..17	**O**		
3055	Code list responsible agency code	C an..3	**D**		3 = IATA (International Air Transport Association) DE 3055 must be used if DE 3225 is used and does not contain an UN/LOCODE.
3224	Location name	C an..256	**O**		
C519	RELATED LOCATION ONE IDENTIFICATION	C	**N**		
3223	First related location name code	C an..25			
1131	Code list identification code	C an..17			
3055	Code list responsible agency code	C an..3			
3222	First related location name	C an..70			
C553	RELATED LOCATION TWO IDENTIFICATION	C	**N**		
3233	Second related location name code	C an..25			
1131	Code list identification code	C an..17			
3055	Code list responsible agency code	C an..3			
3232	Second related location name	C an..70			
5479	Relation code	C an..3	**N**		

Segment Notes:

This segment is used to identify the location where the terms of delivery apply.

Example:
LOC+1+BE-BRU'

5. Segments Layout

Segment number: 30

SG4	- C	200000	-	NAD-DTM-FII-IDE-FTX-TAX-HYN-SG5-SG6-SG7-SG8-SG9-SG10-SG12-SG13
SG10	- C	999	-	PAI-PAT-CUX-DTM-PCD-MOA
PAI	- M	1	-	Payment instructions

Function:

To specify the instructions for payment.

		EDIFACT	GS1	*	Description
C534	PAYMENT INSTRUCTION DETAILS	M	**M**		
4439	Payment conditions code	C an..3	**O**		1 = Direct payment
4431	Payment guarantee means code	C an..3	**O**		20 = Goods as security
4461	Payment means code	C an..3	**O**		42 = Payment to bank account 60 = Promissory note 70 = Bill drawn by the creditor on the debtor 10E = Payment terms defined in the Commercial Account Summary (GS1 Temporary Code) 13E = Payment terms defined in consolidated invoice (GS1 Temporary Code)
1131	Code list identification code	C an..17	**O**		
3055	Code list responsible agency code	C an..3	**D**		
4435	Payment channel code	C an..3	**O**		

Segment Notes:

A segment giving information on usual payment instructions.

PAI+1::42'

5. Segments Layout

Segment number: 31

SG4	- C	200000	-	NAD-DTM-FII-IDE-FTX-TAX-HYN-SG5-SG6-SG7-SG8-SG9-SG10-SG12-SG13
SG10	- C	999	-	PAI-PAT-CUX-DTM-PCD-MOA
PAT	- C	1	-	Payment terms basis

Function:

To specify the payment terms basis.

Notes:
1. This segment will be removed effective with directory D.02B.

		EDIFACT	GS1	*	Description
4279	Payment terms type code qualifier	M an..3	**M**		1 = Basic 3 = Fixed date 7 = Extended 20 = Penalty terms 22 = Discount 37 = Complete payment
C110	PAYMENT TERMS	C	**O**		
4277	Payment terms description identifier	M an..17	**M**		ZZZ = Mutually defined (GS1 Temporary Code)
1131	Code list identification code	C an..17	**O**		
3055	Code list responsible agency code	C an..3	**D**		
4276	Payment terms description	C an..35	**O**		
4276	Payment terms description	C an..35	**O**		
C112	TERMS/TIME INFORMATION	C	**O**		
2475	Time reference code	M an..3	**M**		5 = Date of invoice
2009	Terms time relation code	C an..3	**O**		3 = After reference
2151	Period type code	C an..3	**O**		D = Day M = Month WD = Working days Y = Year
2152	Period count quantity	C n..3	**O**		Number of periods for payment.

Segment Notes:

This segment specifies the usual payment terms for the enterprise identified in the previous NAD segment.

Example:
The following example indicates basic payment terms with payment due 30 days after the reference date which is the invoice date.
PAT+1++5:3:D:30'

5. Segments Layout

Segment number: 32

SG4	- C	200000 -	NAD-DTM-FII-IDE-FTX-TAX-HYN-SG5-SG6-SG7-SG8-SG9-SG10-SG12-SG13
SG10	- C	999 -	PAI-PAT-CUX-DTM-PCD-MOA
CUX	- C	2 -	Currencies

Function:

To specify currencies used in the transaction and relevant details for the rate of exchange.

		EDIFACT	GS1	*	Description
C504	CURRENCY DETAILS	C	**R**		
6347	Currency usage code qualifier	M an..3	**M**	*	2 = Reference currency
6345	Currency identification code	C an..3	**R**		ISO 4217 three alpha
6343	Currency type code qualifier	C an..3	**R**	*	4 = Invoicing currency 10 = Pricing currency 11 = Payment currency
6348	Currency rate value	C n..4	**N**		
C504	CURRENCY DETAILS	C	**D**		The second occurrence of this composite is only used if a target currency is being specified.
6347	Currency usage code qualifier	M an..3	**M**	*	3 = Target currency
6345	Currency identification code	C an..3	**R**		ISO 4217 three alpha
6343	Currency type code qualifier	C an..3	**R**	*	4 = Invoicing currency 10 = Pricing currency 11 = Payment currency
6348	Currency rate value	C n..4	**O**		
5402	Currency exchange rate	C n..12	**D**		The rate of exchange which applies to the currencies. The rate of exchange is only used if a target currency has been identified in the second occurrence of C504.
6341	Exchange rate currency market identifier	C an..3	**N**		

Segment Notes:

This segment is used to specify usual currency applicable for the enterprise identified in the previous NAD segment.
The CUX Segment is mandatory for international exchanges.
When specifying Reference and Target Currencies for international trade, one occurrence of CUX is all that is required. The reference currency is identified in the first occurrence of composite C504, with the target currency specified in the second occurrence of C504. The rate of exchange between the two is detailed in DE 5402.
The general rule for calculating the rate of exchange is as follows :
Reference Currency multiplied by Rate = Target Currency.

Example:
Where only the invoicing currency needs to be identified for national trade.

CUX+2:EUR:4'
CUX+2:EUR:4+3:USD:11+0.90243'

5. Segments Layout

Segment number: 33

SG4	- C	200000	-	NAD-DTM-FII-IDE-FTX-TAX-HYN-SG5-SG6-SG7-SG8-SG9-SG10-SG12-SG13
SG10	- C	999	-	PAI-PAT-CUX-DTM-PCD-MOA
DTM	- C	9	-	Date/time/period

Function:

To specify date, and/or time, or period.

		EDIFACT	GS1	*	Description
C507	DATE/TIME/PERIOD	M	**M**		
2005	Date or time or period function code qualifier	M an..3	**M**	*	7 = Effective date/time 12 = Terms discount due date/time 13 = Terms net due date 209 = Value date 326 = Charge period
2380	Date or time or period value	C an..35	**R**		
2379	Date or time or period format code	C an..3	**R**		102 = CCYYMMDD 718 = CCYYMMDD-CCYYMMDD 804 = Day

Segment Notes:

This segment is used to specify any dates associated with the payment terms.

Example:
DTM+326:30:804'

5. Segments Layout

Segment number: 34

SG4	- C	200000	-	NAD-DTM-FII-IDE-FTX-TAX-HYN-SG5-SG6-SG7-SG8-SG9-SG10-SG12-SG13
SG10	- C	999	-	PAI-PAT-CUX-DTM-PCD-MOA
PCD	- C	9	-	Percentage details

Function:

To specify percentage information.

		EDIFACT	GS1	*	Description
C501	PERCENTAGE DETAILS	M	**M**		
5245	Percentage type code qualifier	M an..3	**M**		7 = Percentage of invoice 12 = Discount 15 = Penalty percentage 16 = Interest percentage
5482	Percentage	C n..10	**R**		
5249	Percentage basis identification code	C an..3	**O**		1 = Per unit 13 = Invoice value
1131	Code list identification code	C an..17	**O**		
3055	Code list responsible agency code	C an..3	**D**		
4405	Status description code	C an..3	**N**		

Segment Notes:

This segment is used to specify percentages which will be allowed or charged if the invoicee pays (does not pay) to terms.

Example:
PCD+15:2.5:13'

5. Segments Layout

Segment number: 35

SG4	- C	200000	-	NAD-DTM-FII-IDE-FTX-TAX-HYN-SG5-SG6-SG7-SG8-SG9-SG10-SG12-SG13
SG10	- C	999	-	PAI-PAT-CUX-DTM-PCD-MOA
MOA	- C	9	-	Monetary amount

Function:

To specify a monetary amount.

		EDIFACT	GS1	*	Description
C516	MONETARY AMOUNT	M	**M**		
5025	Monetary amount type code qualifier	M an..3	**M**		38 = Invoice item amount 178 = Exact amount 201 = Penalty amount
5004	Monetary amount	C n..35	**R**		
6345	Currency identification code	C an..3	**O**		
6343	Currency type code qualifier	C an..3	**O**		
4405	Status description code	C an..3	**N**		

Segment Notes:

This segment is used to indicate monetary amount related to the payment conditions.

Example:
MOA+178:200'

5. Segments Layout

Segment number: 36

SG4	- C	200000	-	NAD-DTM-FII-IDE-FTX-TAX-HYN-SG5-SG6-SG7-SG8-SG9-SG10-SG12-SG13
SG12	- C	999	-	CCI-MOA-QTY-CAV-DTM-MEA
CCI	- M	1	-	Characteristic/class id

Function:

To identify and describe a specific characteristic and its relevance for subsequent business processes.

		EDIFACT	GS1	*	Description
7059	Class type code	C an..3	**O**		6 = Party characteristic
C502	MEASUREMENT DETAILS	C	**N**		
6313	Measured attribute code	C an..3	**O**		
6321	Measurement significance code	C an..3			
6155	Non-discrete measurement name code	C an..17			
6154	Non-discrete measurement name	C an..70			
C240	PRODUCT CHARACTERISTIC	C	**O**		
7037	Characteristic description code	M an..17	**M**		This data element is used to identify the characteristics of a line item in user coded form. As no EDIFACT code list exists for this data element codes should be from the EANCOM code list or be allocated depending on the requirements of the user. Should it not be possible to provide a user code in this data element and a free form characteristic description is used in data element 7036, then it is recommended that the code value 'ZZZ' be put in data element 7037 (which is mandatory).
1131	Code list identification code	C an..17	**O**		
3055	Code list responsible agency code	C an..3	**D**		9 = GS1 60 = Assigned by national trade agency 91 = Assigned by supplier or supplier's agent 92 = Assigned by buyer or buyer's agent
7036	Characteristic description	C an..35	**O**		This data element is used to provide free form text characteristics for use where no coded values exist in data element 7037.
7036	Characteristic description	C an..35	**O**		
4051	Characteristic relevance code	C an..3	**N**		

Segment Notes:

This segment is used to specify the characteristics of the identified enterprise.

Example:
CCI+6++ZZZ::91:PAYMENT SERVICE PROVIDER'
This example indicates that the characteristic being identified is a payment service provider. As no code value is available (code ZZZ is a dummy because DE 7037 is mandatory) the information is provided in free text form.

5. Segments Layout

Segment number: 37

SG4	- C	200000	-	NAD-DTM-FII-IDE-FTX-TAX-HYN-SG5-SG6-SG7-SG8-SG9-SG10-SG12-SG13
SG12	- C	999	-	CCI-MOA-QTY-CAV-DTM-MEA
MOA	- C	9	-	Monetary amount

Function:

To specify a monetary amount.

		EDIFACT	GS1	*	Description
C516	MONETARY AMOUNT	M	**M**		
5025	Monetary amount type code qualifier	M an..3	**M**		38 = Invoice item amount 75 = Registered capital 178 = Exact amount 462 = Annual turnover
5004	Monetary amount	C n..35	**R**		
6345	Currency identification code	C an..3	**O**		
6343	Currency type code qualifier	C an..3	**O**		
4405	Status description code	C an..3	**N**		

Segment Notes:

This Segment is used to indicate monetary amount related to the preceding CCI-Segment.

Example:
MOA+462:1000000:EUR'

5. Segments Layout

Segment number: 38

SG4	- C	200000	-	NAD-DTM-FII-IDE-FTX-TAX-HYN-SG5-SG6-SG7-SG8-SG9-SG10-SG12-SG13
SG12	- C	999	-	CCI-MOA-QTY-CAV-DTM-MEA
QTY	- C	9	-	Quantity

Function:

To specify a pertinent quantity.

		EDIFACT	GS1	*	Description
C186	QUANTITY DETAILS	M	**M**		
6063	Quantity type code qualifier	M an..3	**M**		1 = Discrete quantity 264 = Equipment quantity
6060	Quantity	M an..35	**M**		
6411	Measurement unit code	C an..3	**O**		This DE is only used if the item is of variable quantity.

Segment Notes:

A segment to provide quantity information related to the party characteristics.

QTY+264:98'

5. Segments Layout

Segment number: 39

SG4	- C	200000	-	NAD-DTM-FII-IDE-FTX-TAX-HYN-SG5-SG6-SG7-SG8-SG9-SG10-SG12-SG13
SG12	- C	999	-	CCI-MOA-QTY-CAV-DTM-MEA
CAV	- C	9	-	Characteristic value

Function:

To provide the value of a characteristic.

		EDIFACT	GS1	*	Description
C889	CHARACTERISTIC VALUE	M	**M**		
7111	Characteristic value description code	C an..3	**A**		This data element is used to provide characteristic values. As no EDIFACT code list exists for this data element codes should be allocated depending on the requirements of the user.
1131	Code list identification code	C an..17	**O**		
3055	Code list responsible agency code	C an..3	**D**		9 = GS1 60 = Assigned by national trade agency 91 = Assigned by supplier or supplier's agent 92 = Assigned by buyer or buyer's agent
7110	Characteristic value description	C an..35	**O**		
7110	Characteristic value description	C an..35	**O**		

Segment Notes:

This segment is used to further specify party characteristics for the identified enterprise.

Example:
CAV+:::DELCREDERE AGENT'
When using in combination with the example in the previous CCI indicates that the payment service provider is a delcredere agent. As no code value exist within the industry the free text description is used.

5. Segments Layout

Segment number: 40

SG4	- C	200000	-	NAD-DTM-FII-IDE-FTX-TAX-HYN-SG5-SG6-SG7-SG8-SG9-SG10-SG12-SG13
SG12	- C	999	-	CCI-MOA-QTY-CAV-DTM-MEA
DTM	- C	9	-	Date/time/period

Function:

To specify date, and/or time, or period.

		EDIFACT	GS1	*	Description
C507	DATE/TIME/PERIOD	M	**M**		
2005	Date or time or period function code qualifier	M an..3	**M**		194 = Start date/time 206 = End date/time
2380	Date or time or period value	C an..35	**R**		
2379	Date or time or period format code	C an..3	**R**		102 = CCYYMMDD 718 = CCYYMMDD-CCYYMMDD

Segment Notes:

This segment is used to indicate dates or times related to the process specified in the preceding CCI segment.

Example:
DTM+194:20020101:102'

5. Segments Layout

Segment number: 41

SG4	- C	200000	-	NAD-DTM-FII-IDE-FTX-TAX-HYN-SG5-SG6-SG7-SG8-SG9-SG10-SG12-SG13
SG12	- C	999	-	CCI-MOA-QTY-CAV-DTM-MEA
MEA	- C	9	-	Measurements

Function:

To specify physical measurements, including dimension tolerances, weights and counts.

		EDIFACT	GS1	*	Description
6311	Measurement purpose code qualifier	M an..3	**M**		SH = Shipping tolerance
C502	MEASUREMENT DETAILS	C	**O**		
6313	Measured attribute code	C an..3	**A**		AAA = Unit net weight HT = Height dimension LN = Length dimension
6321	Measurement significance code	C an..3	**O**		3 = Approximately 4 = Equal to
6155	Non-discrete measurement name code	C an..17	**O**		
6154	Non-discrete measurement name	C an..70	**N**		
C174	VALUE/RANGE	C	**R**		
6411	Measurement unit code	M an..3	**M**		
6314	Measurement value	C an..18	**O**		
6162	Range minimum value	C n..18	**O**		
6152	Range maximum value	C n..18	**O**		
6432	Significant digits quantity	C n..2	**N**		
7383	Surface or layer code	C an..3	**N**		

Segment Notes:

This segment is used to specify any measurements related to the currently identified characteristic identification.

Example:
MEA+SH+LN+MTR:10'

5. Segments Layout

Segment number: 42

SG4	- C	200000	-	NAD-DTM-FII-IDE-FTX-TAX-HYN-SG5-SG6-SG7-SG8-SG9-SG10-SG12-SG13
SG13	- C	999	-	PRC-DTM-SG14
PRC	- M	1	-	Process identification

Function:

To identify a process.

		EDIFACT	GS1	*	Description
C242	PROCESS TYPE AND DESCRIPTION	C	**R**		
7187	Process type description code	M an..17	**M**		XX1 = Processing of orders at the supplier (GS1 Temporary Code) XX2 = Processing of orders at the retailer (GS1 Temporary Code)
1131	Code list identification code	C an..17	**O**		
3055	Code list responsible agency code	C an..3	**D**		9 = GS1
7186	Process type description	C an..35	**O**		
7186	Process type description	C an..35	**O**		
C830	PROCESS IDENTIFICATION DETAILS	C	**N**		
7191	Process description code	C an..17			
1131	Code list identification code	C an..17			
3055	Code list responsible agency code	C an..3			
7190	Process description	C an..70			

Segment Notes:

This segment is used to provide processing information for the enterprise identified in the preceding NAD Segment.

PRC+XX2'

5. Segments Layout

Segment number: 43

SG4	- C	200000	-	NAD-DTM-FII-IDE-FTX-TAX-HYN-SG5-SG6-SG7-SG8-SG9-SG10-SG12-SG13
SG13	- C	999	-	PRC-DTM-SG14
DTM	- C	9	-	Date/time/period

Function:

To specify date, and/or time, or period.

		EDIFACT	GS1	*	Description
C507	DATE/TIME/PERIOD	M	**M**		
2005	Date or time or period function code qualifier	M an..3	**M**		194 = Start date/time 206 = End date/time
2380	Date or time or period value	C an..35	**R**		
2379	Date or time or period format code	C an..3	**R**		102 = CCYYMMDD 718 = CCYYMMDD-CCYYMMDD

Segment Notes:

This segment is used to indicate dates or times related to the process specified in the preceding PRC segment.

Example:
DTM+194:20020101:102'

5. Segments Layout

Segment number: 44

SG4	- C	200000	-	NAD-DTM-FII-IDE-FTX-TAX-HYN-SG5-SG6-SG7-SG8-SG9-SG10-SG12-SG13
SG13	- C	999	-	PRC-DTM-SG14
SG14	- C	999	-	LIN-NAD-SG15
LIN	- M	1	-	Line item

Function:

To identify a line item and configuration.

		EDIFACT	GS1	*	Description
1082	Line item identifier	C an..6	**R**		Application generated number.
1229	Action request/notification description code	C an..3	**O**		1 = Added 2 = Deleted 3 = Changed
C212	ITEM NUMBER IDENTIFICATION	C	**N**		
7140	Item identifier	C an..35			
7143	Item type identification code	C an..3			
1131	Code list identification code	C an..17			
3055	Code list responsible agency code	C an..3			
C829	SUB-LINE INFORMATION	C	**N**		
5495	Sub-line indicator code	C an..3			
1082	Line item identifier	C an..6			
1222	Configuration level number	C n..2	**N**		
7083	Configuration operation code	C an..3	**N**		

Segment Notes:

This segment is used to specifiy a line number.

Note on DE 1082:
Numbering rule: In Part I, section 4.10 there is the recommendation “Within EANCOM® it is recommended that the line numbers used in the first occurrence of data element 1082 in the LIN segment be sequential, starting at 1 for each new message.”

Example:
LIN+1'

5. Segments Layout

Segment number: 45

SG4	- C	200000	-	NAD-DTM-FII-IDE-FTX-TAX-HYN-SG5-SG6-SG7-SG8-SG9-SG10-SG12-SG13
SG13	- C	999	-	PRC-DTM-SG14
SG14	- C	999	-	LIN-NAD-SG15
NAD	- M	1	-	Name and address

Function:

To specify the name/address and their related function, either by C082 only and/or unstructured by C058 or structured by C080 thru 3207.

		EDIFACT	GS1	*	Description
3035	Party function code qualifier	M an..3	**M**		BY = Buyer DP = Delivery party SU = Supplier
C082	PARTY IDENTIFICATION DETAILS	C	**A**		
3039	Party identifier	M an..35	**M**		For identification of parties it is recommended to use GLN - Format n13.
1131	Code list identification code	C an..17	**N**		
3055	Code list responsible agency code	C an..3	**R**	*	9 = GS1
C058	NAME AND ADDRESS	C	**O**		This composite may only be used to fulfill the requirements of directive 2003/58/EC, article 4.
3124	Name and address description	M an..35	**M**		
3124	Name and address description	C an..35	**O**		
3124	Name and address description	C an..35	**O**		
3124	Name and address description	C an..35	**O**		
3124	Name and address description	C an..35	**O**		
C080	PARTY NAME	C	**D**		
3036	Party name	M an..35	**M**		Party Name in clear text.
3036	Party name	C an..35	**O**		
3036	Party name	C an..35	**O**		
3036	Party name	C an..35	**O**		
3036	Party name	C an..35	**O**		
3045	Party name format code	C an..3	**O**		
C059	STREET	C	**D**		
3042	Street and number or post office box identifier	M an..35	**M**		Building Name/Number and Street Name
3042	Street and number or post office box identifier	C an..35	**O**		
3042	Street and number or post office box identifier	C an..35	**O**		
3042	Street and number or post office box identifier	C an..35	**O**		
3164	City name	C an..35	**D**		City/Town name, clear text
C819	COUNTRY SUB-ENTITY DETAILS	C	**D**		
3229	Country sub-entity name code	C an..9	**O**		

5. Segments Layout

Segment number: 45

		EDIFACT	GS1	*	Description
1131	Code list identification code	C an..17	**O**		
3055	Code list responsible agency code	C an..3	**O**		
3228	Country sub-entity name	C an..70	**O**		County/State, clear text.
3251	Postal identification code	C an..17	**D**		Postal Code
3207	Country name code	C an..3	**D**		ISO 3166 two alpha code

Segment Notes:

This segment is used to identify the party, who's role is described in the preceding PRC segment.

Example:
NAD+BY+5412345000020::9'
NAD+SU+4012345500004::9'
NAD+DP+5412345000013::9'

Dependency Notes:
The following composites and data elements are only used when a coded name and address can not be used.
The affected composites and data elements are as follows:
C080 - C059 - 3164 - C819 - 3251 - 3207

5. Segments Layout

Segment number: 46

SG4	- C	200000	-	NAD-DTM-FII-IDE-FTX-TAX-HYN-SG5-SG6-SG7-SG8-SG9-SG10-SG12-SG13
SG13	- C	999	-	PRC-DTM-SG14
SG14	- C	999	-	LIN-NAD-SG15
SG15	- M	99	-	DOC
DOC	- M	1	-	Document/message details

Function:

To identify documents and details directly related to it.

		EDIFACT	GS1	*	Description
C002	DOCUMENT/MESSAGE NAME	M	**M**		
1001	Document name code	C an..3	**R**		315 = Contract
1131	Code list identification code	C an..17	**O**		
3055	Code list responsible agency code	C an..3	**D**		9 = GS1
1000	Document name	C an..35	**O**		
C503	DOCUMENT/MESSAGE DETAILS	C	**R**		
1004	Document identifier	C an..35	**R**		
1373	Document status code	C an..3	**O**		5 = Information only
1366	Document source description	C an..70	**N**		
3453	Language name code	C an..3	**N**		
1056	Version identifier	C an..9	**N**		
1060	Revision identifier	C an..6	**N**		
3153	Communication medium type code	C an..3	**O**		EI = EDI transmission MA = Mail
1220	Document copies required quantity	C n..2	**N**		
1218	Document originals required quantity	C n..2	**N**		

Segment Notes:

This segment is used to identify any documentation related to the enterprise identified in the preceeding NAD segment.

Example:
DOC+315+NL52441'

5. Segments Layout

Segment number: 47

UNT - M 1 - Message trailer					
Function: To end and check the completeness of a message.					
		EDIFACT	GS1	*	Description
0074	Number of segments in the message	M n..6	**M**		The total number of segments in the message is detailed here.
0062	Message reference number	M an..14	**M**		The message reference numbered detailed here should equal the one specified in the UNH segment.
Segment Notes: This segment is a mandatory UN/EDIFACT segment. It must always be the last segment in the message. Example: UNT+21+ME000001'					

5. Segments Layout

Segment number: 48

UNZ - M 1 - Interchange trailer					
Function: To end and check the completeness of an interchange.					
		EDIFACT	GS1	*	Description
0036	Interchange control count	M n..6	**M**		Number of messages or functional groups within an interchange.
0020	Interchange control reference	M an..14	**M**		Identical to DE 0020 in UNB segment.
Segment Notes: This segment is used to provide the trailer of an interchange. UNZ+5+12345555' DE 0036: If functional groups are used, this is the number of functional groups within the interchange. If functional groups are not used, this is the number of messages within the interchange.					

6. Examples

The following is an example of a Party Information message reference number PI4356 sent 1 February 2002, from a party identified by GLN 5412345000013 to a party identified by GLN 5412345000020.

The sender provides information about :

• the GLN of the corporate office	4012345500004
• the start date of the GLN is	March, 10, 2002
• the contact name is	MR SMITH
• the contact's telephone is	00322256631
• the function of the corporate office is	corporate identity
• the GLN of the invoice recipient is	5412345672908
• the account number	is 994-3277885
• the function of the invoice recipient is	payer
• the GLN of the store is	5410013111009
• the function of the store is	ordered by
• the GLN of the delivery party is	3312345501003
• the function of the delivery party is	receiver of goods
• the delivery scheduling information	each Tuesday morning
• in the supplier orders process	the parties involved in this process are responsible for ordering and paying

Party Information message:

UNH+ME000001+PARTIN:D:01B:UN:EAN009’	Message header
BGM+10+PI4356+9'	Party information number PI4356
DTM+137:20020201:102'	Message date 1st of February 2002
FTX+GEN+1+001::91'	Coded text information
NAD+FR+5412345000013::9'	Message from party identified by GLN 5412345000013
NAD+MR+5412345000020::9'	Message recipient identified by GLN 5412345000020
UNS+D'	Message header/detail separator
NAD+CO+4012345500004::9++EAN+RUE ROYALE 145+BRUXELLES++B-1000+BE'	Corporate office identified by GLN 4012345500004, and structured name and address
DTM+194:20020310:102'	The start date of the GLN is March 10, 2002
IDE+X48'	The function(s) of the party identified in the NAD segment is Corporate identity.
CTA+SA+:MR SMITH'	The contact name is MR SMITH
COM+ 00322256631:TE'	The phone number is 00322256631.
NAD+ITO+5412345678908::9'	Invoice recipient party identified by GLN 5412345678908
FII+PB+994-3277885:CORNER SHOP+KREDBEBB:25:5’	Account number 994-3277885, held by Corner Shop, with Kredietbank in Belgium

6. Examples

IDE+IV'	The function of the party identified in the NAD segment is invoicee
HYN+PA+1+4012345500004:GLN::9'	The GLN 4012345500004 takes the parent function of the party identified by the GLN 5412345678908 in the NAD segment.
NAD+SN+5410013111009::9'	Store number identified by GLN 5410013111009
IDE+OB'	The function of the party identified in the NAD segment is issuer of the orders
HYN+PA+1+4012345500004:GLN::9'	The GLN 4012345500004 takes the parent function of the party identified by the GLN 5410013111009 in the NAD segment.
NAD+DP+3312345501003::9'	Delivery party identified by GLN 3312345501003
IDE+ST'	The function of the party identified in the NAD segment is to be the place where goods are shipped to
HYN+PA+1+4012345500004:GLN::9'	The GLN 4012345500004 takes the parent function of the party identified by the GLN 3312345501003 in the NAD segment.
SCC+1++W:14:D'	Deliveries are scheduled for am on each Tuesday
PRC+8+++SUPPLIER ORDERS PROCESS'	The process described is the supplier order
LIN+1'	Line number 1
NAD+OB+4012345500004::9'	GLN 4012345500004 has the role of ordering party in the process.
DOC+315+CT125’	Contract number is CT125
LIN+2’	Line number 2
NAD+PR+5412345678908 : :9’	GLN 5412345678908 has the role of paying party in the process.
DOC+315+C459’	Contract number is C459
UNT+32+ME000001'	Total number of segments in the message equals 32

Note:
The EDI interchange will include the UNB..UNZ segments and, if applicable, the UNG..UNE segments. (see Part I, section 5.7)